FL 413FW

The most reliable mining engine in the world



www.wme.cn

The engine company. DEUTZ®

DEUTZ Engine F6L413FW

www.wme.cn/deutz-f6l413fw/

102 - 204 kW|137 - 274 hp at 1500 - 2300 min^{-1}|rpm
US-MSHA

- Air-cooled 6-, 8-, 10- and 12-cylinder V engines.
- The robust engine design guarantees high operational safety, also even under extreme conditions when working underground.
- The very compact engine design of the V engine and the integrated cooling system reduce the installation costs.
- Low operating costs due to low fuel consumption, low amounts of ventilation, as well as long maintenance intervals with low maintenance requirements.
- Capacity: 1.6 l/cylinder, modular system with single cylinders.
- Certified in accordance with US-MSHA (Mine Safety and Health Administation).
- It allows worldwide operation even with high sulphur fuels and low cetane fuels.
- Low noise emissions due to acoustically optimized components with very smooth running and high durability.
- Various PTO options.
- In-direct Injection models (FW) for lowered emission levels, ideal for Mining and underground equipment.

Technical data

Engine type		F6L 413FW	F8L 413FW	F10L 413FW	F12L 413FW
No. of cylinders		**6**	**8**	**10**	**12**
Bore/stroke	mm | in	125/130 | 4.92/5.12	125/130 | 4.92/5.12	125/130 | 4.92/5.12	125/130 | 4.92/5.12
Displacement	l | cu in	9.6 | 584	12.8 | 779	15.9 | 974	19.1 | 1168
Maximum nominal speed	min^{-1} | rpm	2300	2300	2300	2300

Engine type		F6L 413FW	F8L 413FW	F10L 413FW	F12L 413FW
Power output as per ISO 14396[1)]	kW | hp	102 | 137	136 | 182	170 | 228	204 | 274
at speed	min^{-1} | rpm	2300	2300	2300	2300
Max. torque	Nm | lb/ft	500 | 369	665 | 490	830 | 612	995 | 734
at speed	min^{-1} | rpm	1500	1500	1500	1500
Minimum idling speed	min^{-1} | rpm	600	600	600	600
Specific fuel consumption[2)]	g/kWh | lb/hph	276 | 0.45	276 | 0.45	276 | 0.45	276 | 0.45
Weight as per DIN 70020 Part 7A[3)]	kg | lb	660 | 1455	830 | 1830	990 | 2183	1120 | 2469

1) Power data without deduction of fan power.
2) Best full load consumption, relates to diesel fuel with a density of 0.835 kg/dm3 at 15°C.
3) Without starter/dynamo, but with a flywheel and flywheel housing.

The data on this data sheet are for information purposes only and are not binding values. The data in the quotation is definitive.

www.wme.cn

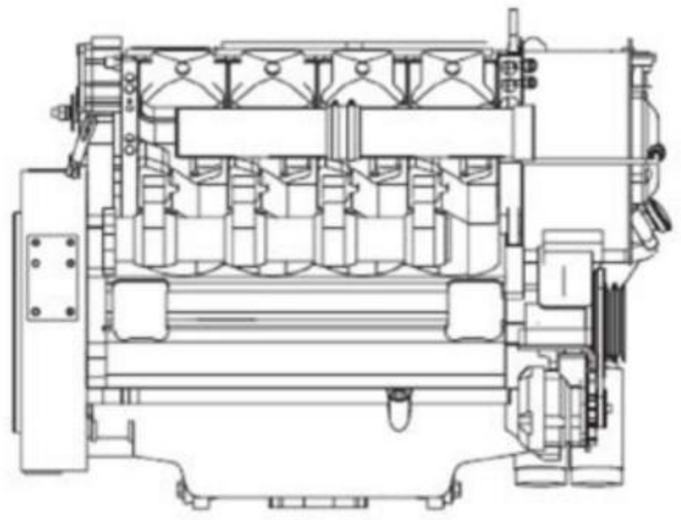

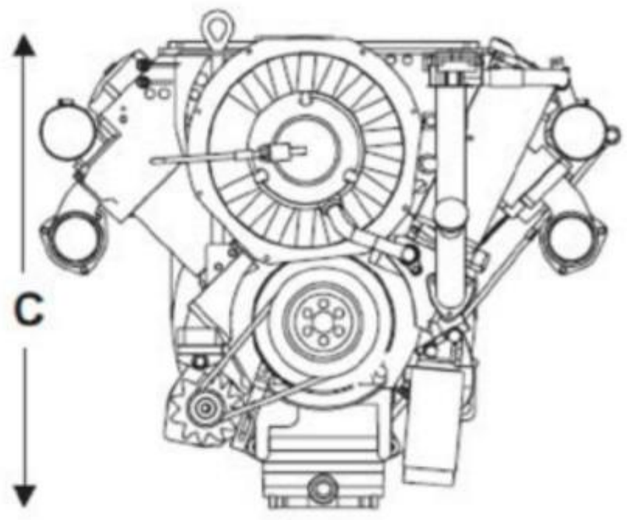

A

B

Engine		Length	Width	Hight
F6L413FW	mm	915	1038	860
F8L413FW	mm	1080	1038	860
F10L413FW	mm	1283	1038	999
F12L413FW	mm	1448	1038	1007

PTO Capabilites

www.wme.cn

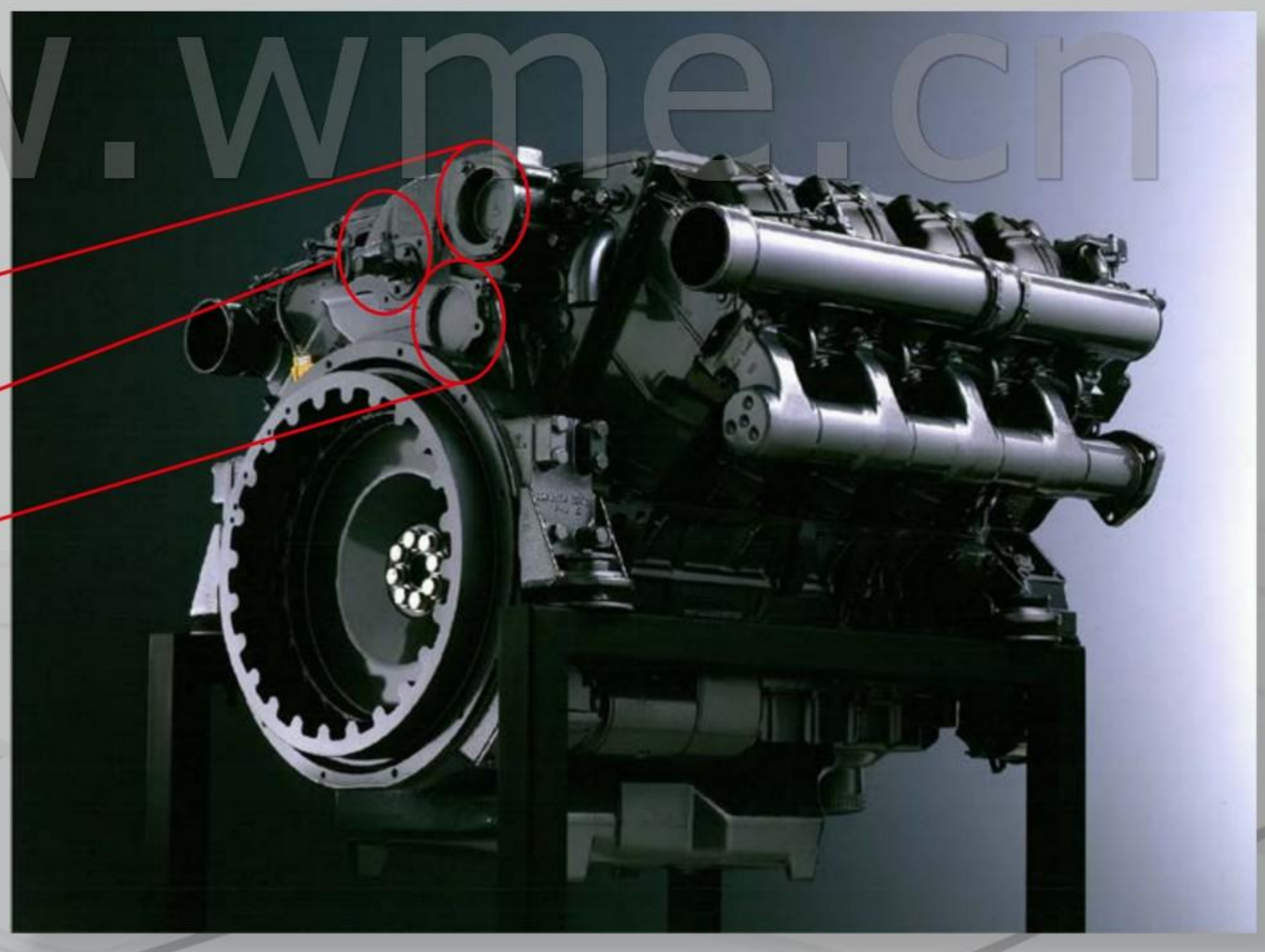

Power steering pump drive

Provision for Air compressor

Auxiliary drive (V8 Only)