www.wme.cn

SD22 TECHNICAL PARAMETERS

ENGINE

Model	Cummins NT855-C280S10
Emission standard	China-II
Rated speed	1800rpm
Gross power	175kW (235hp)
Net power	162kW (220hp)
Piston displacement	14.01L
Maximum Torque	1080N.m/1300rpm

TRANSMISSION SYSTEM

Transmission system	The drive system with stable and reliable quality, is self-made by Shantui, which comprises a torque converter with efficiency of up to 90%; hydraulic transmission with 3 forward gears and 3 reverse gears
Travel speed at forward/reverse gear	Forward speed: 3.6/6.5/11.2 km/h Reverse speed: 4.3/7.7/13.2 km/h
Traction force	450kN
Steering clutch	Wet-type, multi-disc spring hold-down, hydraulic disengagement
Steering brake	Wet-type, floating belt-type
Final drive	Reduction of dual spur gear, splash lubrication

CHASSIS SYSTEM

Type	Splayed beam oscillating, balance beam suspension structure
Track type	Single-shank
Center distance of crawler	2000mm
Width of track shoe	560/610/660mm
Length of track on ground	2430mm
Track grounding area	28727cm²
Number of Crawler Sections	38/side
Specific pressure to ground (standard configuration)	66kPa
Number of carrier roller	2/side
Quantity of thrust wheels	6/side
Chain rail pitch	216mm
Minimum turning radius	3300mm

MAINTENANCE CAPACITY

Fuel tank capacity	450L
Coolant liquid capacity	79L
Engine oil capacity	45L
Hydraulic fuel tank	110L
Final drive	82L/ONE SIDE

OPERATING WEIGHT

Equipped with cab + traction frame	23450kg

BLADE

Blade type	Straight-tilt blade
Blade capacity	4.6m³

DIMENSIONS

Height of complete machine (excluding ROPS)	3402mm
Grouser height	72mm
Ground clearance	405mm
Overall length of complete machine (including traction frame)	6060mm
Overall length of complete machine (excluding traction frame)	6027mm
Maximum Lifting Height of Blade	1210mm
Maximum penetrating depth of blade	540mm
Inclination angle of blade	55°±3°
Blade length	3725mm
Blade height	1315mm

RIPPER

Type	Single-shank/ Three-shank
Penetrating depth	695/666mm
Lifting height	515/555mm

www.wme.cn

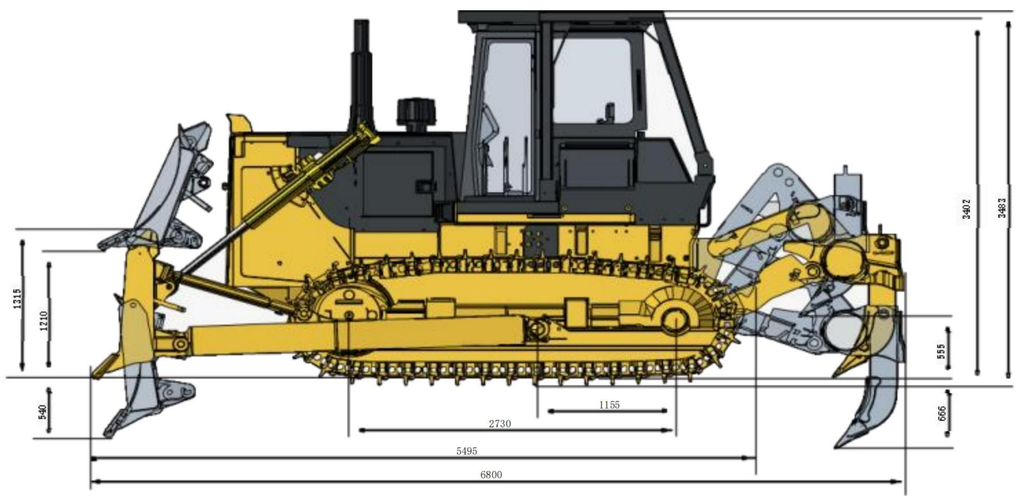

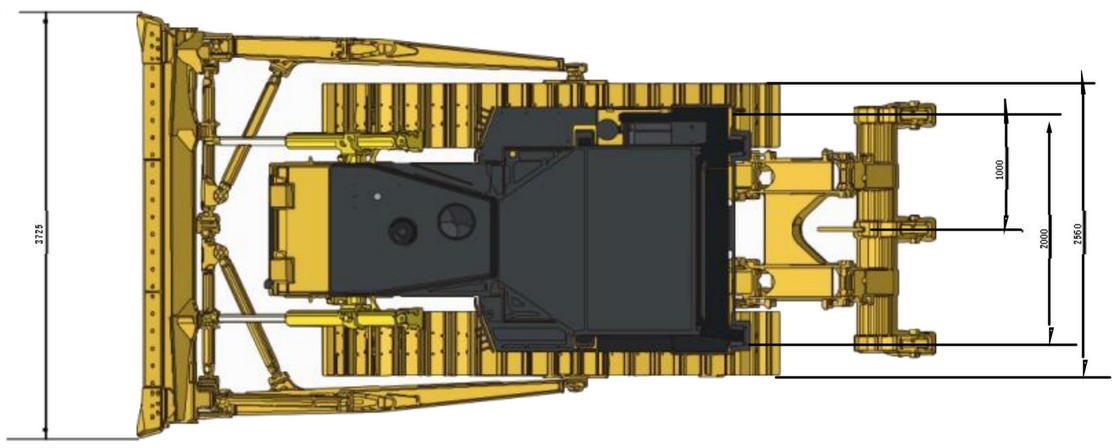

* The specification is subject to change without advance notice. Images may include optional configurations. The actual color and appearance of the product may differ from what is shown in the images.