www.wme.cn

D170

Crawler Bulldozer

The export-version D170 bulldozer is a hydrodynamically transmitted bulldozer with electronic-controlled gear shifting, developed by XCMG for overseas markets. It inherits XCMG's premium product quality and delivers stable, reliable performance.

This machine is suitable for earth excavation, backfilling, dozing, and hauling of soil and rock on highways, railways, airports, river projects and other sites. It is an indispensable construction machine for national defense projects, urban development, water conservancy construction and other construction works.

It adopts advanced technologies including intelligent control, load limiting, hydraulic pilot control for the dozer blade, electronic-controlled gear shifting and construction data management. It is a construction equipment featuring advanced technology, high working efficiency, comfortable and flexible operation, and high reliability

D170

Crawler Bulldozer

Performance and Features

- 7-inch color LCD touch monitor, HMI interface supports language switching among Chinese / English / Russian. The main screen displays machine parameters, operating status, gear information, fault alarms and other equipment parameters in real time.
- Equipped with Weichai WD10G178E25 engine, meets Non-Road Stage N-II emission requirements. It features strong power, high efficiency, energy saving and easy maintenance.

The machine working efficiency is greatly improved while overall fuel consumption is lower, helping users save operating costs.

- Torque converter with sensor, enables effective real-time monitoring of speed and torque.

Overall Dimensions

Unit:mm

Model	L1	L2	L3	H1	H2	H3	H4	W1	W2	W3
D170	5930	4390	2643	3600	1045	540	1095	4060	2390/2440/2490	1880

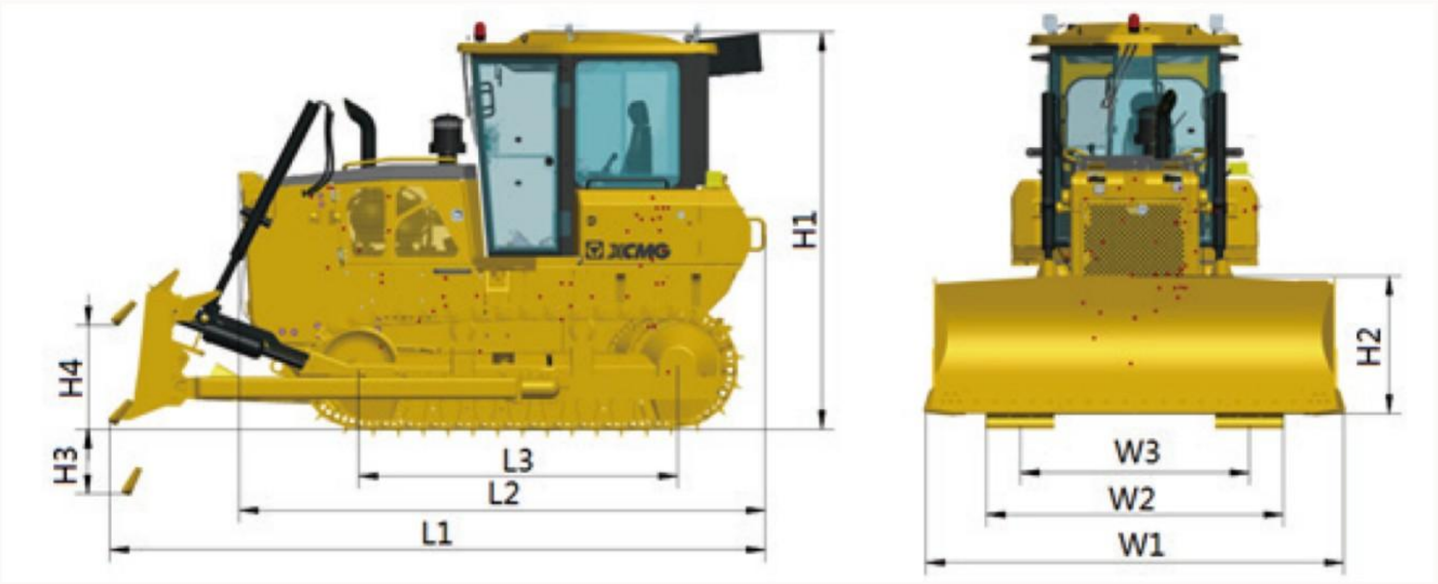

Main Specifications

www.wme.cn

Item	Description	Unit	D170
Machine Performance	Operating weight	kg	17400
	Minimum turning radius	mm	2800
	Ground pressure	Kpa	56/51/47
	Overall dimensions	mm	5930×4060×3600
Engine	Model	/	WD10G178E25
	Rated power / Rated speed	kW/rpm	131/1850
Travel Performance	Forward gear 1	km/h	3.6
	Forward gear 2	km/h	6.3
	Forward gear 3	km/h	10.2
	Reverse gear 1	km/h	4.7
	Reverse gear 2	km/h	8.2
	Reverse gear 3	km/h	13.0
	Ground clearance	mm	450
Chassis System	Track width	mm	1880
	Track shoe width	mm	510/560/610
	Track ground contact length	mm	2635
	Number of track shoes (one side)	pcs	39
	Track pitch	mm	203
	Number of carrier rollers (one side)	pcs	2
	Number of track rollers (one side)	pcs	7
Tank Capacity	Fuel tank	L	350
	Hydraulic oil tank	L	110
Working Device	Blade type	/	Angle blade
	Blade width	mm	4060
	Blade height	mm	1045
	Blade capacity	m^3	3.5
	Blade lift height above ground	mm	1095
	Cutting depth	mm	540
	Ripper type	mm	Three shank (optional)
	Working depth	mm	572
	Ripper lift height above ground	mm	592