徐工徐工 助您成功

SOLID TO SUCCEED

www.wme.cn

XCMG

高技术装备

用科技守护生命

PROTECT LIFE WITH SCIENCE AND TECHNOLOGY

徐工”钢铁螳螂”应急救援机器人

XCMG 'IRON MANTIS' EMERGENCY RESCUE PLATFORM

ET113(113E)/ET121(121E)/ET210

www.wme.cn

01

装备介绍
EQUIPMENT INTRODUCTION

徐工“钢铁螳螂”应急救援机器人学名步履式挖掘机，该产品在高海拔、山地、林地、沟壑、沼泽、隧道等地带作业仍可“如履平地”，到达其他机械无法到达的地方进行工程作业。同时可以搭载不同工作机具，实现挖掘、灭火、伐木、切割、破碎、钻孔、剪切、打桩等多种作业功能，在雪崩、地震、滑坡等灾害现场进行各种应急救援工作。该产品的最大爬坡幅度可以到达45度，最大跨越垂直高度2.4米，最大跨越壕沟宽度4米，最大涉水深度2米，亦可用于市政工程、水利工程建设中一般设备不能适用的工况。

The product can still work in high altitudes, mountains,woodlands,ravines,swamps,tunnels and other areas like working on flat ground, and it can reach places where other machinery cannot reach for engineering operation.At the same time,it can be equipped with different work tools to realize various operation functions such as excavation,fire extinguishing,logging, cutting,crushing,drilling,shearing and piling, and carry out various emergency rescue work in avalanches,earthquakes,landslides and other disaster sites.The maximum climbing range of the product can reach 45 degrees,the maximum spanning vertical height is 2.4m,the maximum crossing trench width is 4m,and the maximum wading depth is 2m.It can also be used in municipal engineering and water conservancy engineering construction where general equipment cannot be applied.

www.wme.cn

02

装备特点
EQUIPMENT FEATURES

强大地形通过能力
Powerful terrain trafficability

应急救援机器人底盘采用多自由度轮履复合式结构，四条步行腿灵活多变，步行爬坡能力达到45°，可跨越3. 5m/4m 壕沟，轻松越过2. 2m/2.4m 的垂直障碍，涉水深度可达1. 8m/2m，能够到达其他设备难以到达的区域。

Emergency rescue robot requires a chassis with multi-degree of freedom composite wheel structure,four walking legs are flexible, walking climbing ability reaches 45°,can cross 3.5m/4m trenches,easily cross 2.2m/2.4m vertical obstacles,wading depth up to 1.8m/2m,able to reach areas that are difficult for other devices.

复杂环境下的作业能力
Operating ability in complex conditions

应急救援机器人不仅可以在普通环境下作业，在陡峭的山坡、水网、沼泽、林地等复杂环境仍然可以自如的作业，独有的极限载荷调节技术，可实现高原、平原动力的最佳匹配，配备快换装置，可快速更换多种作业机具。

The emergency rescue robot can not only operate in ordinary environment,but also in the complicated environment such as steep slope,water network,swamp and woodland.The unique limit load adjustment technology can achieve the best power matching for plateau and plain.It is equipped with quick change device,allows quick replacement of a variety of operating machines and tools.

www.wme.cn

可更换三角履带，接地面积大，通过性强

Wheels can be replaced by triangular crawler pad, significantly increasing contact area and gradeability.

02

装备特 点
EQUIPMENT FEATURES

高度集成的电液操控系统
Highly integrated electro-hydraulic control system

通过自主编程的专用控制软件、CAN 总线技术和可编程控制器对电液系统进行集成，可将车况信息进行收集并进行智能化管理，提高了整机的稳定性、安全性和可靠性；应用电液集成操纵手柄，使操作便捷、准确、灵活、易学、实现了操作的简单化和人性化。

The electro-hydraulic system is integrated through the special control software of independent programming,CAN bus technology and programmable controller,which can collect and intelligently manage the vehicle condition information and improve the stability,safety and reliability of the whole machine.The application of electro-hydraulic integrated control handle simplifies and humanizes the operation.

电液集成控制手柄
Electro-hydraulic integrated control handle

可编程控制器
Programmable controller

www.wme.cn

完善的系统安全设计
Perfect system safety design

系统配置动臂下落自动保护装置、底盘支腿油缸液压锁、最大起重力矩限制安全阀和报警装置等，可防止设备在使用中管路损坏带来的意外危险；平台倾角传感器可及时提示操作中平台倾翻风险；陡坡作业时，可选装液压绞盘作辅助牵引保护。

The system is equipped with automatic falling protection device of the movable arm,hydraulic lock of the chassis support leg cylinder,safety valve of maximum lifting moment limit and alarm device, etc.,which can prevent accidental danger caused by pipeline damage in use.Platform tilt sensor can timely alert.

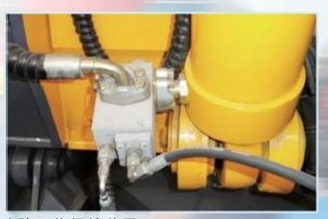

动臂下落保护装置
Equipped with automatic falling protection device

平台倾斜保护装置
Platform protection

02 装备特 点
EQUIPMENT FEATURES

○完备的液压动力接口
Complete hydraulic power interface

配有7路液压动力接口，可快速连接液压破碎锤、液压抓斗、液压绞盘等，实施破碎、抓举和救援作业；可为液压钻机、液压振动铲、液压剪等多种液压机具提供液压动力，完成钻孔、凿岩和混凝土破碎、松土等作业。

Seven hydraulic power interfaces are arranged to quickly connect the hydraulic hammer,hydraulic grab bucket,hydraulic winch,etc.to implement crushing,snatching and rescue operations;It can provide hydraulic power for hydraulic drilling rig,hydraulic vibration shovel,hydraulic shear and other hydraulic machines to complete driling,rock drilling,concrete crushing,soil loosening,etc.

液压动力接口
Hydraulic power interfaces

○便捷的维护性能
Convenient service performance

配置了可翻转式防滚翻、防落物驾驶室，在保障安全的同时，可方便维护保养发动机与电液系统；底盘轮边减速机具有机械脱开装置，便于整机故障时拖行 。

Cab is equipped with ROPS and FOPS,the engine and electro-hydraulic system can be easily maintained while ensuring safety.The chassis wheel side reducer is equipped with a mechanical release device,which is convenient for towing when the whole machine fails.

防翻滚、防落物驾驶室
Cab is equipped with ROPS and FOPS

www.wme.cn

03

性能参数
PERFORMANCE PARAMETER

项目Item	单位Unit	ET113(113E)	ET121(121E)	ET210
整机重量 Total weight	kg	11300	12000	21000
标准斗容 Standard bucket capacity	m³	0.3	0.3	0.8
发动机功率 Engine power	kW	110	110	221
斗杆挖掘力 Stick digging force	kN	47	47	100
铲斗挖掘力 Bucket digging force	kN	63	63	135
最大挖掘半径 Max,digging radius	mm	7700	7700	9800
最大卸载高度 Max,unloading clearance	mm	7000	7000	8000
最大挖掘深度 Max.digging depth	mm	5400	5500	6500
最小回转半径 Minimum radius	mm	2800	2800	3505
最大起重能力 Maximum lifting capacity	kN	56	56	100
最高行驶速度 Max,travel speed	km/h	≥10	≥10	≥15
最大越障高度 Max.obstacle crossing height	mm	2200	2680	2800
最大涉水深度 Max.fording depth	mm	1800	2000	2400
最大步行爬坡能力 Max,walking and climbing ability	o	45	45	45
最大跨越壕沟宽度 Max.crossing trench width	mm	3500	4000	5300
最大步距 Max.pace	mm	5000	5000	6500
有效遥控距离 Effective remote controldistance	m	2000	2000	2000
驾驶室防护能力 Driver's cab protection capability	防滚翻、防落物 Anti-rollover,anti-falling objects			
油箱容积(主、副) Fuel tank capacity(main,secondary)	L	85/276	85/276	240/400
持续工作时长 Continuous working hours	h	12	12	

www.wme.cn

04

起吊重量曲线
LIFTING WEIGHT CURVE

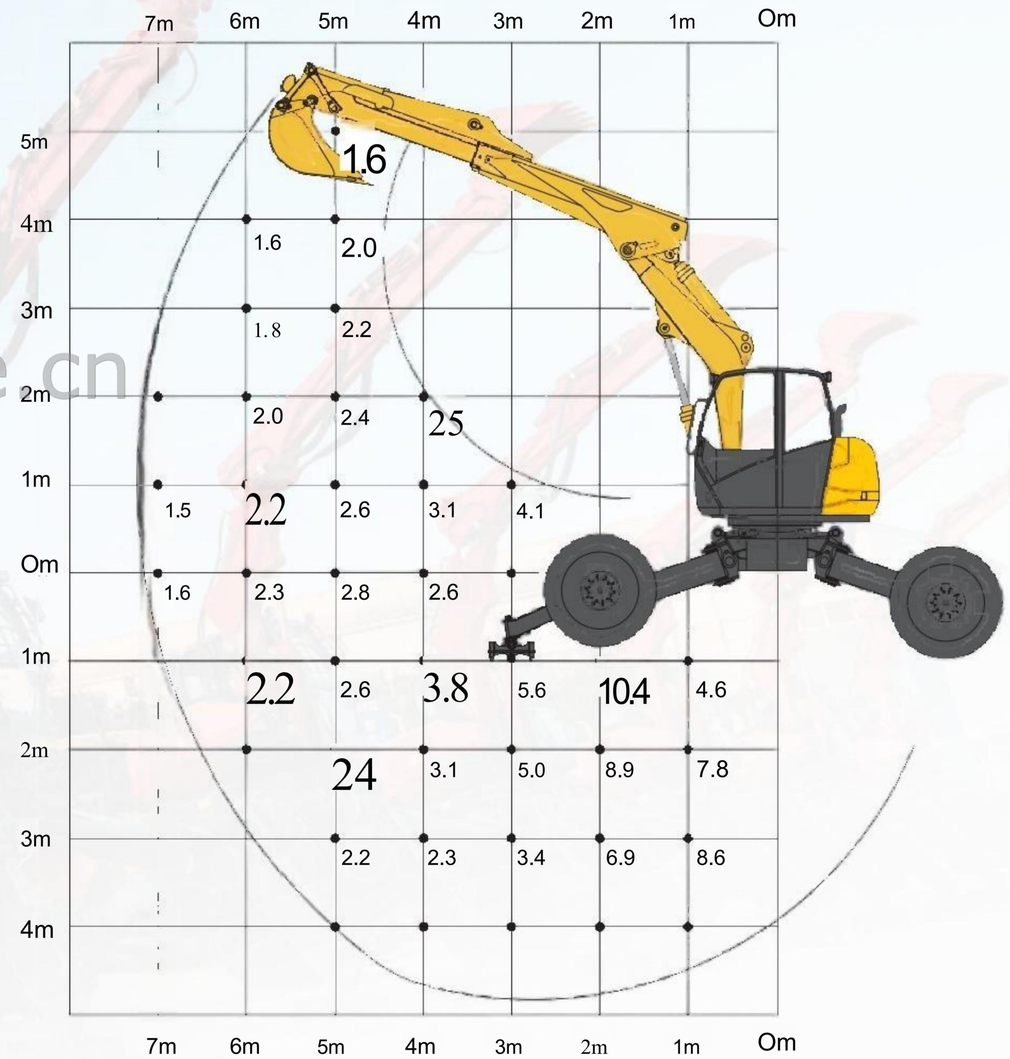

外形和尺寸
INDUSTRIAL DESIGN AND DIMENSIONS

ET113(113E)

○ ET113(113E)应急救援机器人是一种特殊的步行式挖掘机，其步行腿的升降，可使底盘离地高度在0到1420mm 之间变化，斗杆的伸缩也可在0~1400mm之间变化，因此，步履式挖掘机的整机外形尺寸，需要根据不同的工况来确定。

○ 正常行驶时，大轮朝前，后腿关节上平面和回转平台与地面平行，铲斗油缸处于最大伸出状态，伸缩油缸完全收回，铲斗最低点距地面高600mm；两小轮外侧面与前进方向平行，且两大轮外侧面分别与两小轮外侧面在同一平面；整机最前端距大轮中心垂直平面距离为1960mm，如图所示。此时外形尺寸为7500×4050×2540mm。由于一般公路桥涵的限高4m，因此，公路行驶通过桥涵时，须适当降低动臂。

○ ET113(113E)Emergency rescue platform is a special kind of machine with height adjustable legs which can make the chassis height from the ground change within the range of 0 and 1 420 mm,telescopic arm can also change between 0～1400 mm,therefore,the dimension of excavator machine depends on different conditions.

○ In normal driving circumstances,the big wheels move forward,the up plane of rear legs joint is parallel to the slewing platform and ground,the bucket cylinder is in most stretching state,the cylinder is fully retracted,the lowest point of the bucket is 600 mm from the ground; The outward plane of two small wheels is parallel to direction of forward motion,the outward plane of two big wheels is in the same plane with that of two small wheels.The distance between front end of the machine and the center vertical plane of big wheels is 1960mm,as shown in figure.The overalldimension of the machine now is 7500×4050×2540mm.The height limit of normal bridge and culvert of highway is 4m, therefore the arm of the machine shall be lowered during traveling through the bridge and culverts.

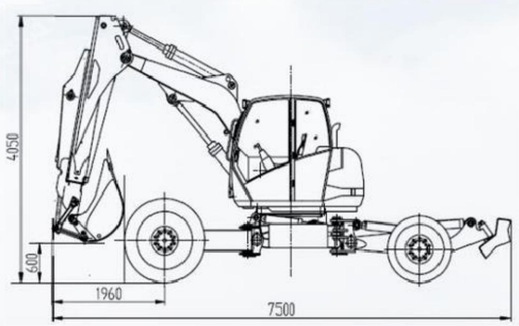

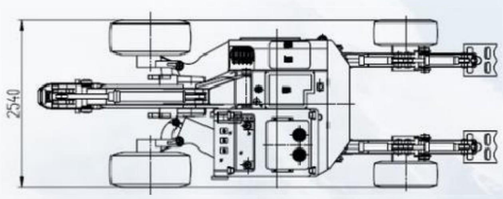

ET121(121E)

○ ET121(121E)应急救援机器人是一种特殊的步行式挖掘机，其步行腿的升降，可使底盘离地高度在0到1420mm之间变化，斗杆的伸缩也可在0~1400mm 之间变化，因此，步履式挖掘机的整机外形尺寸，需要根据不同的工况来确定。

○ 正常行驶时，大轮朝前，后腿关节上平面和回转平台与地面平行，铲斗油缸处于最大伸出状态，伸缩油缸完全收回，铲斗最低点距地面高600mm；两小轮外侧面与前进方向平行，且两大轮外侧面分别与两小轮外侧面在同一平面；整机最前端距大轮中心垂直平面距离为1960mm，如图所示。此时外形尺寸为7700×4050×2500mm。由于一般公路桥涵的限高4m，因此，公路行驶通过桥涵时，须适当降低动臂。

○ ET121(121E)Emergency rescue platform is a special kind of machine with height adjustable legs which can make the chassis height from the ground change within the range of 0 and 1420 mm,telescopic arm can also change between 0～1400 mm,therefore,the dimension of excavator machine depends on different conditions.

○ In normal driving circumstances,the big wheels move forward,the up plane of rear legs joint is parallel to the slewing platform and ground,the bucket cylinder is in most stretching state,the cylinder is fully retracted,the lowest point of the bucket is 600 mm from the ground; The outward plane of two small wheels is parallel to direction of forward motion,the outward plane of two big wheels is in the same plane with that of two small wheels.The distance between front end of the machine and the center vertical plane of big wheels is 1960mm,as shown in figure.The overalldimension of the machine now is 7700×4050×2500mm.The height limit of normal bridge and culvert of highway is 4m, therefore the arm of the machine shall be lowered during traveling through the bridge and culverts.

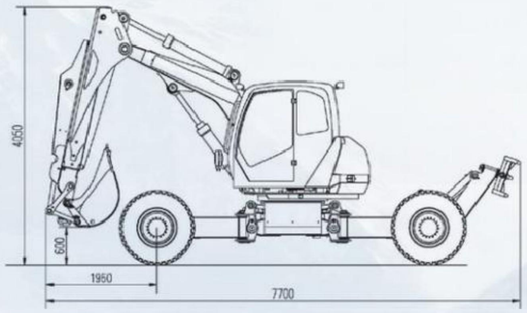

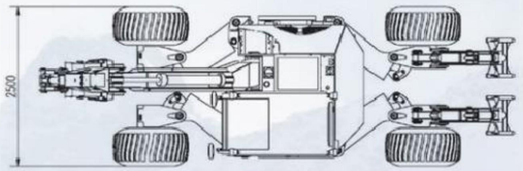

www.wme.cn

06

功能展示
FUNCTION SHOW

最大涉水深度2米
Maximum fording depth:2m

最大垂直越障高度2.4米
Maximum vertical span height:2.4m

最大跨越壕沟宽度4米
Maximum width of span ditch:4m

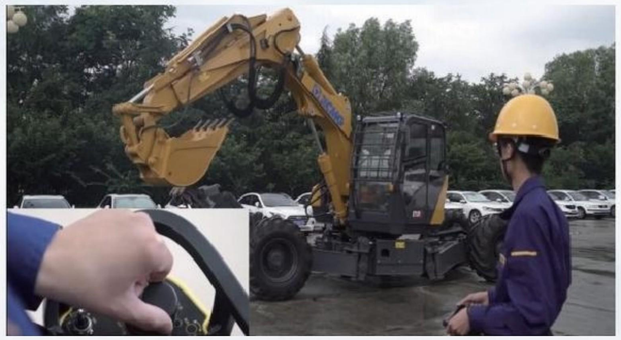

可实现远距离遥控操作，最大遥控距离2000米
Can realize long-distance remote control operation,the maximum remote control distance 2000 meters

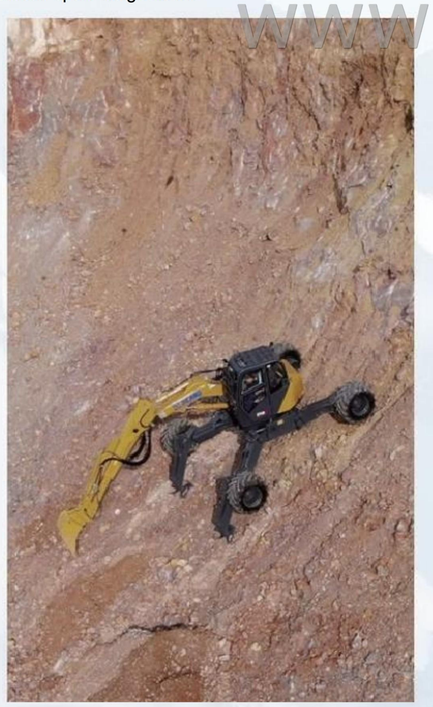

最大爬坡45度
Maximum climbing:45 degrees

www.wme.cn

07

工作机具
WORKING T00LS

挖斗
Bucket

挖掘作业
Digging operation

消防炮
Fire monitor

城市山林灭火、降温
City forest extinguishment and cooling

岩石锯
Rock saw

割裂岩石等坚硬障碍物
Split rock and other hard barrier

植桩器
Pile planting device

快速打桩，防止泥石流和二次坍塌
Quick piling to prevent debris **flow and second collapse**

破碎锤
Quartering hammer

钢筋混凝土和石块破碎
Rebar concrete and stone broken

土孔、岩石钻
Soil hole,rock borer

泄洪、钻孔爆破
Flood discharge,borehole blasting

绞盘
Winch

拖拽牵引救援
Dragging traction rescue

液压剪
Hydraulic shear

切断混凝土和钢筋
Cutting concrete and rebar

抓斗
Grab bucket

抓取、清理障碍物
Grabbing, **clear obstacles**

打桩机
Pile hammer

具有空心钢管、钢板桩等桩料的植入功能
With hollow steel pipe,steel sheet pile pile implantation function

液压水泵
Hydraulic water pump

出水口适配快速接口1套
A set of fast water outlet adapter interface.

振动夯
Vibrating tamper

具有平整压实土堤功能
It has the function of leveling and compacting soil embankment

抓料斗
Grab bucket

具有沙料、细石料等材料的搬运与抓取作业功能
With **sand,fine stone and other materials handling and grasping operation function**

抓木器
Log grapple

具有抓取、搬运桩木、钢管等长条型物料功能
It has the function of grasping and transporting long strip material such as pile wood

扩张器
Dilator

打开救援通道
open rescue channels

旋挖钻
Rotary Drilling Rig

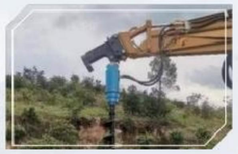

成孔作业
hole-forming operation

08

应用案例
APPLICATION CASE

www.wme.cn

A 2023年12月20日，ET120 步履式挖掘机驰援甘肃积石山地震救援现场
In December 2023,rushed to the rescue site of the Jishishan earthquake in Gansu Province.

B 2023年6月，ET120 助力安能救援队完成广西北海水灾救援道路保通任务
In June 2023,ET120 assisted the Anneng rescue team in completing the task of ensuring road connectivity for flood relief in Beihai,Guangxi.

C 2020年9月，雅西高速救援
In September 2020,take part in the rescue of Yaxi Highway.

D 2020年4月，驰援四川凉山木里火灾救援现场
In April 2020,rushed to the scene of fire rescue in Muli,Liangshan, Sichuan Province.

E 2023年2月，广东消防应急演练
In february 2023,participated in the Guangdong Fire Emergency Exercise.

F 2021年7月，河南新乡救援
In July 2021,participated in the rescue in Xinxiang,Henan Province.

XCMG

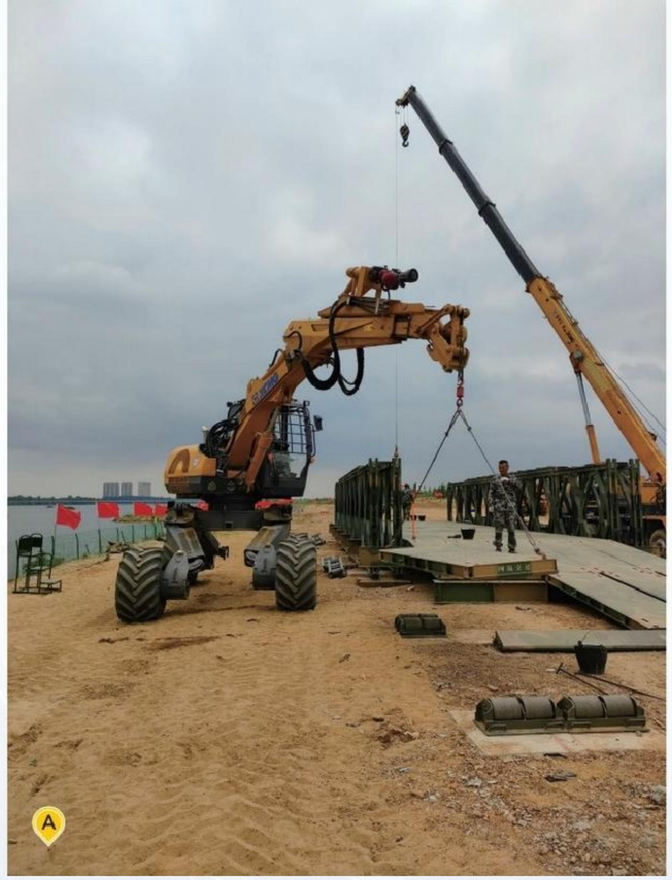

www.wme.cn

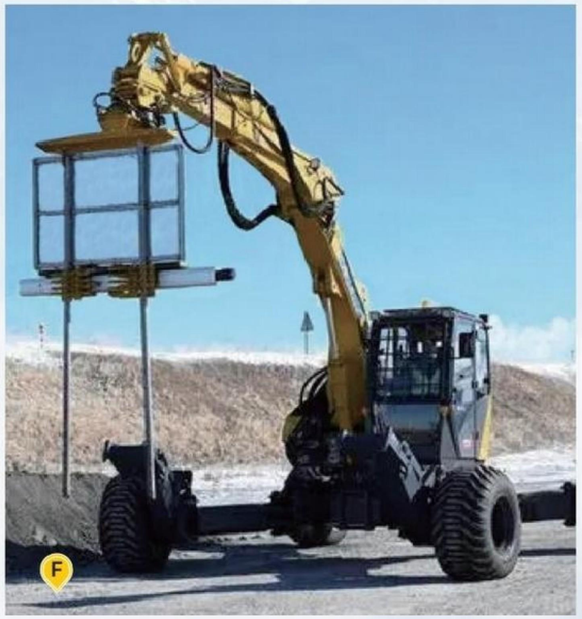

A 2023年5月，临沂国储中心吊装施工
In May 2023,assisted the hoisting construction of Linyi National Storage Center.

(B 2020年1月，2021年9月，两次参与北京冬奥会场馆建设
In January 2020 and September 2021,participated in the construction of venues for the Beijing Winter Olympics twice.

C 2022年8月，助力国网江西电力高压输变电塔基成孔
In August 2022,completed the hole construction of high voltage power transmission and transformation for Jiangxi Power Branch of State Grid Group.

D 2023年12月，“钢铁螳螂”进行景区索道基础施工
In December 2023,"Iron Mantis"carried out the foundation construction of the scenic cableway.

E 2023年7月，陕西安能分公司进行抓取清障作业
In July 2023,assisted ShaanxiAneng Branch to carry out capture and removal operations

F 2023年2月，“钢铁螳螂”应用在内蒙古智慧矿山建设
In February 2023,"Iron mantis"was applied to the mine construction in Inner Mongolia.

www.wme.cn

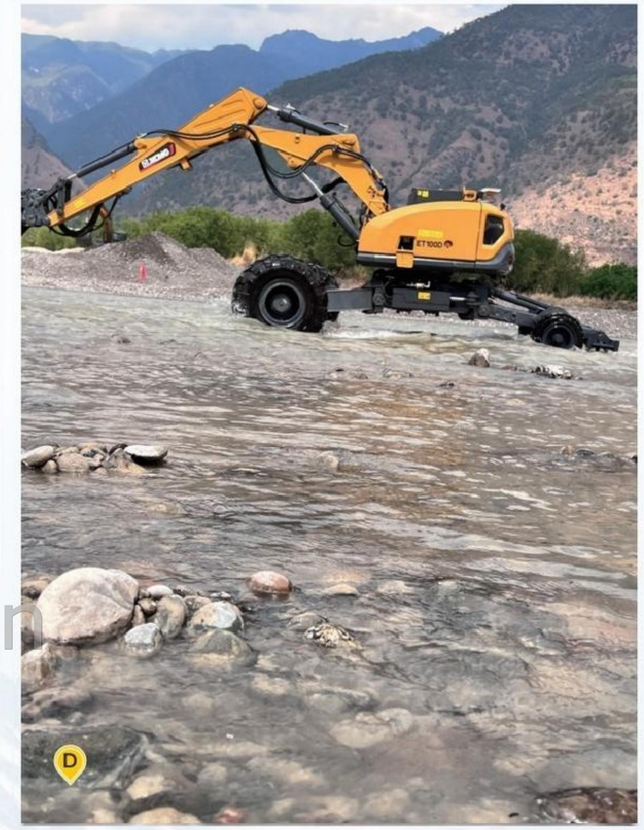

A 2022年4月，参与“应急使命2022”救灾实战化演习
In April 2022,participated in the ‘Emergency Mission 2022’disaster relief exercise.

B 2023年3月，参与广西壮族自治区森林火灾应急处置演练
In March 2023,the equipment participated in a forest fire emergency response drill in Guangxi Zhuang Autonomous Region.

C 2023年3月，助力国家电网机械化施工现场会
In March 2023,the equipment participated in the State grid mechanized construction site meeting.

D 2023年5月，参与“应急使命2023”救灾实战化演习
In May 2023,participated in the "Emergency Mission 2023"disaster relief combat exercise.

E 2023年6月，参与西藏公路交通救援演习
In June 2023,he participated in ahighway traffic rescue exercise in Tibet.

F 2023年9月，安能三局西安公司抗震救援演练
In September2023,assisted Aneng Xi'an Branch in earthquake rescue drill.

加装振动夯，压实土堤功能
Equipped with vibration rammer,can be compacted soil embankment function.

加装抓木器，具有抓取、搬运桩木、钢管等长条形物料
Equipped with wood grabber,can grab or transport pile wood and steel pipe and other long materials.

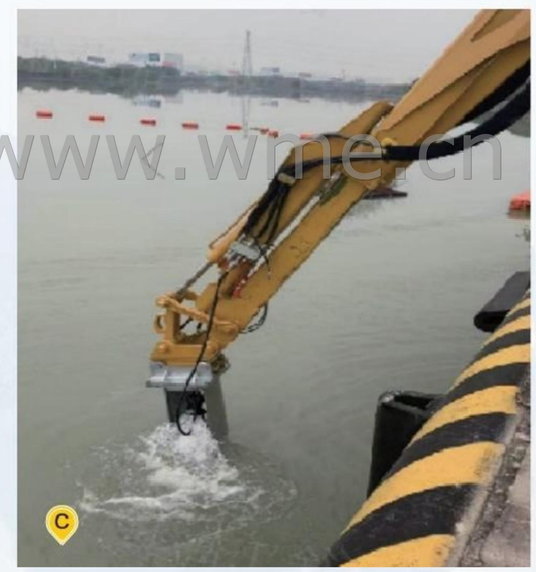

加装压水泵，进行快速抽水作业
Equipped with pressure pump,can carry out rapid pumping operation.

加装打桩机，将空心钢管、钢板桩进行置桩作业
Hollow steel pipe and steel sheet piles can be placed with pile driver.

河道、浅滩涉水清淤作业，最大涉水深度达2米
Can be wading in the river,shoal silt removal operations,the maximum wading depth of 2 meters.

A B C D E

2022年11月，无锡水利多种机具施工
In November 2022,helped Wuxi Water Conservancy Company to use a variety of machines and tools for construction.

www.wme.cn