XCMG

XE27U

CRAWLER EXCAVATOR

www.wme.cn

Operating weight	Max. traction force	Rated power
2880kg	29.7kN	18.2kW

SOLID TO SUCCEED

Excavator XCMG XE27U

www.wme.cn/xcmg-xe27u/

Overall Overview

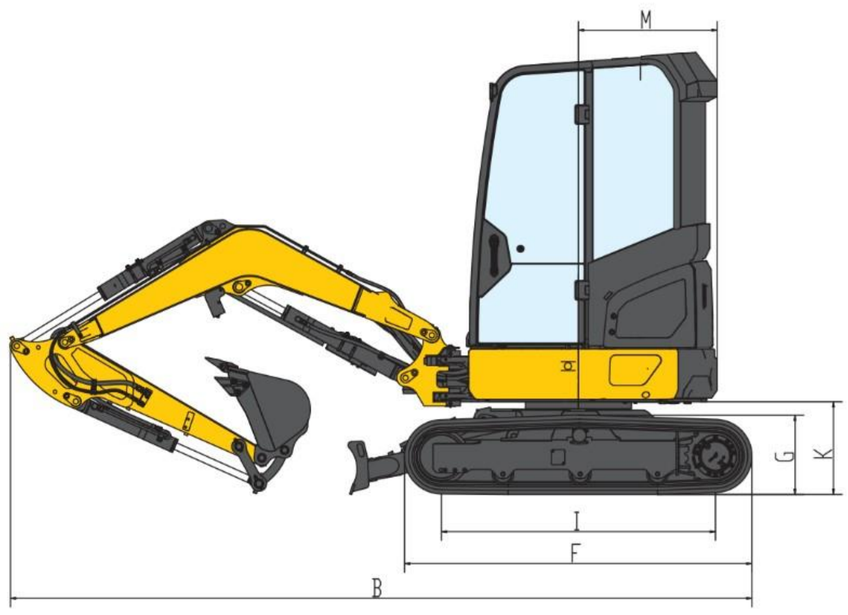

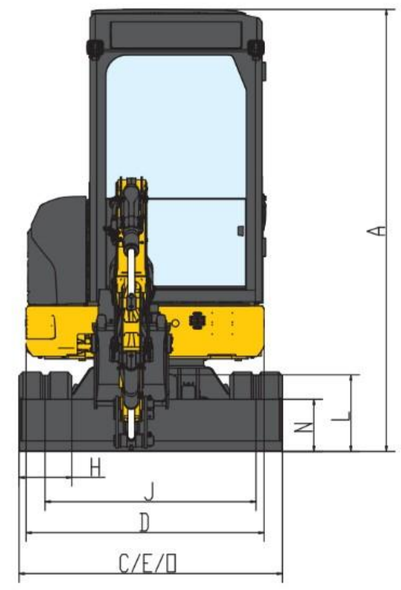

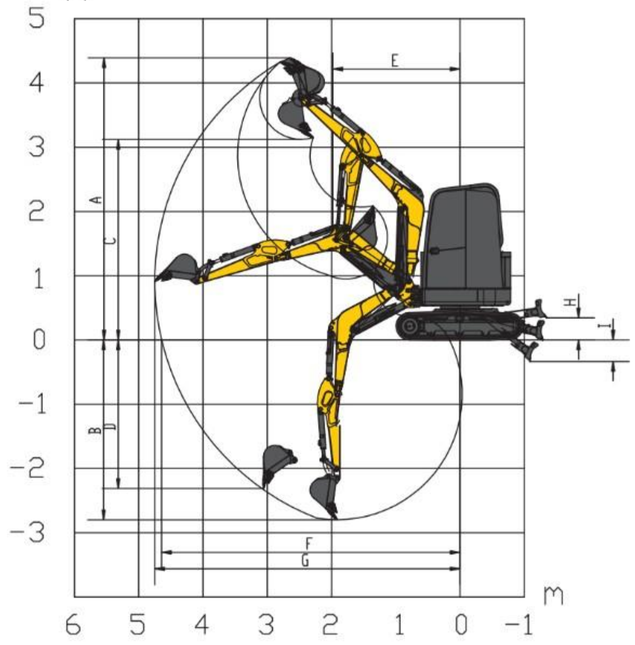

Model	XE27U
Operating Weight	2880

Overall Dimension	unit:mm
Overall Height	2520
Overall Length	4225
Overall Width	1500
Upper Frame Width	1350
Chassis Width (Extended/Retracted)	1500
Track Length	1980
Track Height	450
Standard Track Shoe Width	300
Track Wheelbase	1560
Track Gauge (Extended/Retracted)	1200
Counterweight Clearance	528
Minimum Ground Clearance	315
Tail Swing Radius	790
Blade Height	300
Blade Width (Extended/Folded)	1500

Engine	
Engine Brand/Model	Kubota D1305
Rated Power / Speed / kW/rpm	18.2/2400
4-Stroke	✓
Water Cooled	✓
Turbocharged	/
Stroke / mm	88
Bore / mm	78
Cylinders	3
Max Torque / Speed / N·m/rpm	81.3/1600
Displacement / L	1.261

Working Range	unit:mm
Max Digging Radius	4390
Max Ground Digging Radius	4750
Max Digging Height	4390
Max Dumping Height	3210
Min Dumping Height	955
8ft Level Digging Depth	2312
Max Vertical Digging Depth	2310
Max Digging Depth	2800
Min Swing Radius	1980
Max Blade Lift Height	310
Max Blade Cutting Depth	330
Offset Boom Angle (Left)	72°
Offset Boom Angle (Right)	55°

Main Performance	
Travel Speed (High/Low) km/h	3.8/2.1
Swing Speed r/min	10
Max Swing Torque / kN·m	3.5
Gradeability	30° (58%)
Ground Pressure / kPa	27.4
Bucket Digging Force (ISO) / kN	22
Arm Digging Force (ISO) / kN	14
Max Traction Force / kN	29.7

Hydraulic System	
Main Pump	1 × Variable Pump
Max Main Flow L/min	82.8
Main System Pressure / MPa	24.3
Pilot System Pressure / MPa	3.5
Travel System Pressure / MPa	24.3
Swing System Pressure / MPa	19

Fluid Capacity	
Fuel Tank Capacity / L	38
Hydraulic Tank Capacity / L	22

www.wme.cn