XGP90

Crawler Pipelayer

履带式吊管机

www.wme.cn

履带式吊管机 型号XGP90
最大起重量：90t
额定起重量：76.5t

Crawler pipe crane model: XGP90
Max. lifting capacity: 90t
Rated lifting capacity: 76.5t

徐工系列吊管机是我公司根据管道施工市场特点进行研制的成熟产品。正如徐工产品一样，具备高可靠性、使用寿命高，起重性能强，维修方便，使用成本低等优点。目前已经形成25t吊管机、45t吊管机、70t吊管机、90t吊管机共4款产品。

XCMG Crawler Pipelayers are purpose-built to meet the unique demands of pipeline customers. And like every XCMG machine, Pipelayers are designed for long life, serviceability and rebuild capability to help keep owning and operating costs low. The 25t to 90t（25t, 45t, 70t, 90t）pipelayers are designed with forward-looking features, including increased lift capacity, enhanced slope capability, ease of operation, performance and transportability.

XGP90

XGP45吊管机亮点介绍
XGP45 pipelayer highlights

施工范围广
XGP90标配9.5m主臂，起重性能与同行产品相当，主臂长度高出同行产品10%,，为用户提供更多选择空间。

动力配置优良强劲
配备257kW重庆康明斯发动机，“国Ⅲ”排放，性能优良，带有涡轮增压器，在海拔3000米的高原仍能正常工作。配备冷启动功能，低于-20℃时，控制器启动预热程序，对循环水预热，实现发动机的正常启动。

专用底盘，可靠性高、稳定性好
采用液力机械传动，传动效率高，行走平稳，无冲击，驱动力大，爬坡能力强。底盘刚性连接，稳定性好，可靠性高

具有强制动功能
当吊管机在坡道重载时，由于自重很大，易引起制动失效产生溜车现象。为防止此类事故发生，增加强制动功能，具体结构是在吊管机底盘后桥箱后部加装液压驻车制动油缸，由液压蓄能器、电磁换向阀组成的保压回路为制动油缸持续提供动力。

具有快速落钩功能
起升机构带有快放离合器，在整机出现倾翻危险时，按下快放开关，起升机构快放离合器，实现快速落钩，保证整机不出现倾翻。

液压先导比例控制系统
采用先进的液压比例控制技术，操作者可通过操纵先导手柄控制各执行机构的运动方向及运动速度，轻便、灵活，可无极调速，微动性好。

安全性高
配置赫斯曼力限器系统，对起重工况进行全面监测、显示，防止设有主臂仰检测，防止主臂起过最大工作角度；装有平衡重到位检测，保证平衡重到位后才能进行起重，设有高度限位检测，防止起升机构过卷。

Wide construction range
XGP90 standard configuration has a 9.5m long main boom, its lifting performance is equivalent to other brands, the length of main boom is 10% longer than other brands, providing s users with more choices.

Excellent and strong power configuration
Equipped with 257kW Chongqing Cummins engine, in compliance with "GB III" emission standard, high performance, and with a turbocharger; work properly even at an altitude of 3000 meters plateau. Equipped with cold start function, when the ambient environment temperature is below -20 ℃, the controller starts preheating program, preheat circulating water, to achieve the normal start of engine.

Dedicated chassis, high reliability and good stability
The use of hydraulic mechanical transmission is with high efficiency, smooth travelling, no impact, strong drive force and grade-ability. Undercarriage is in rigid connection with good stability and high reliability.

Strong braking function
When the pipelayer is with heavy load on a slope, due to heavy deadweight, is it easily for the vehicle to go forward because of brake failure. In order to prevent such accidents, a strong braking function is added. The specific structure is to install a hydraulic parking brake cylinder at the rear part of the rear axle box of the pipelayer chassis. The pressure maintaining circuit, which is composed of a hydraulic accumulator and an electromagnetic reversing valve, is used to provide constant power for brake cylinder.

Quick release function
Hoist mechanism has quick release clutch, when the machine is in danger of tipping over, press the quick release switch, the hoist mechanism will release the clutch in order to lower the hook quickly, so as to prevent the occurrence of machine overturning.

Hydraulic pilot proportional control system
Using advanced hydraulic proportional control technology, the operator can control the direction and speed of the movement of each actuator by operating the hydraulic control handle; it is light, flexible, step-less adjustable speed, and good fine motion ability.

High security
Configured Hirschmann LMI system to fully monitor and display the lifting conditions, there is boom over-hoisted inspection to prevent main boom from the maximum working angle; there equipped with a counterweight in-place detector to lift load after counterweight is in place; there also is a height limit detector to prevent the lifting mechanism being over-hoisted.

www.wme.cn

底盘

底盘主要包括履带架、车架、动力系统、行走传动系统、操纵室、行走操控系统，履带架包括四轮一带，与车架通过螺栓实现刚性连接，底盘轨距2490mm，履带接地长度3620mm，动力系统动力强劲，采用重庆康明斯发动机，发动机功率257kw，发动机额定转速2000r/min，动力系统具有冷启动功能，保证在低温环境下发动机正常启动，传动系统通过发动机、变矩器、变速箱三位一体的液力传动方式，实现底盘的前进、后退、转弯等动作，传动系统具有强制动功能，能够有效防止坡道溜车。

起升机构

起升机构由卷扬机、驱动马达、制动器、快速落钩离合器等组成。起升机构由液压马达通过行星齿轮减速机构驱动卷扬机磙筒，实现吊钩的上升、下降。该起升机构除具有正常的起吊功能外，还具有快速落钩功能，在减速机输入端设有常闭式制动器，保证起升机构安全可靠。

单绳速度：0～48m/min。

最大单绳拉力: 12t。

变幅机构

变幅机构由卷扬机和变幅马达等组成。吊臂为框架式焊接结构，卷扬机为行星齿轮减速式卷扬机，该机安全系数大，机械效率高。该卷扬机由液压马达驱动，实现吊臂的变幅运动

单绳速度：0～43m/min

最大单绳拉力:10t

主臂

主臂采用A型架结构，由双肢结构组成，两肢之间有加强横梁，稳定性好。主臂主要结构为优质方钢拼焊而成，制造缺陷少，安全系数高。主臂在变幅机构作用下实现起臂、落臂。

Undercarriage

Crane undercarriageconsists of track frame, car-body, drive system, travel unit, operator's cab and travel unit. The track frame, which includes track shoe, upper roller, lower roller, guide roller and drive sprocket, is rigid connected to car-body by bolts. The crawler track center distance is 2490mm, crawler track ground length is 3620mm. Chongqing Cummins engine is adopted for the drive system, rated power 257kW, rated speed 2000r/min, with strong power. The engine is equipped with cold start function to ensure that it can be started normally at low temperature. On the basis of the integrated hydraulic transmission of engine, torque convertor and gear box, the drive system is able to realize the undercarriage movements such as travel forward, travel backward, turning around and etc.. The transmission system also has strong brake function which can prevent slipping effectively when the pipelayer is travel on slope.

Hoist mechanism

Hoist mechanism is made up of hoister, drive motor, brake, hook quick release clutch, etc. The hoister drum is driven by hydraulic motor through planetary reducer so as to realize the hoisting and lowering of hook block. Except for the normal lifting function, the hoist unit is also equipped with hook quick release function. Constant closed brake is installed on reducer input end to ensure the safety and reliability of hoist mechanism. safe and reliable.

Single line speed: 0～48m/min

Max. single line pull: 12t.

Luffing mechanism

Luffing mechanism is composed of hoister and luffing motor. The boom is welded frame-type structure. The hoister is planetary gear reducer with high safety coefficient and high machinery efficiency. The hoister is driven by hydraulic motor to realzie boom luffing.

Single line speed: 0～43m/min.

Max. single line pull: 10t.

Boom

Boom is A-frame structure with two limbs, strenghened transverse beam is set between the two limbs to ensure good stability. Boom is welded by high quality square steel with less manufacturing defect and high safety coefficient. Boom raising and lowering can be realized under the function of luffing mechanism.

产品的部件和系统描述
Main Parts and System Description

电气控制系统

显示器、力限器、角度传感器、销轴传感器、高度限位器，过仰接近开关有机组合，实现对整机安全性能的监控及实时工作状态的指示。

集成电路组成的监控器实时监控发动机的水温，机油压力，发动机转速，工作小时计等参数以及整机的工作状态，如主臂过仰等参数，通过指示灯及蜂鸣器报警。

液压系统

液压比例先导控制,控制精准,微动性好,调速范围广。

采用成熟可靠的液压元件,成熟稳定的液压传动控制技术。操作简单,维修维护方便。与电气系统相配合,保证主机安全稳定。

平衡重

平衡重由配重架、配重块、驱动油缸等组成。配重架为外摆式四连杆机构，配重机构的伸缩由液压缸驱动，整个配重机构结构简单，使用可靠。

配重采用四连杆结构形式，上下摆动，操纵简单，动作平稳可靠。摆动配重机构通过

作用油缸驱动，实现配重的收放。

左右安装支架

左右安装支架是联系上下车的关键承载结构件，主受力结构采用钢板焊接而成的平板式箱型结构，主臂、起升机构、变幅机构和平衡重布置在主受力结构上；左右支架结构合理，整体强度和刚度好，运输受限时左右支架可以实现拆卸。

Electrical control system

Display, load moment limiter, angle sensor, pin shaft sensor, height limiter and over-hoisted approach switch are combined together to monitor the overall safety performance and indicate the real-time working state.

Integrated circuit composed monitoring device can not only provide real-time monitoring for parameters such as engine water temperature, engine oil pressure, engine revolution speed, working hours, but also the overall working state, such as boom over-hoisted parameter, alarming will be given by indicator lamp and buzzer.

Hydraulic system

Hydraulic proportional pilot control, with accurate control, good fine motion performance and wide range of speed adjustment.

The adopted hydraulic components are mature and relaible, the hydraulic transmission control technique is mature and stable. Easy to operate and convinient to maintain and repair. The hydraulic system is coordinated with electrical system to ensure basic machine safety and stability.

Counterweight

Counterweight consists of counterweight bracket, counterweight slab and drive cylinder. The counterweight bracket is outward swing type four-bar linkage. Counterweight telescoping is driven by hydraulic cylinder. The overall structure of counterweight is mature and reliable.

Counterweight adopts the form of four-bar linkage, swing upward and downward, easy to operate with smooth and reliable movement. The swing counterweight system is driven by cylinder to realize its extension and retraction.

Left/right installation strut

Left and right installation struts are key load bearing structural components to connect superstructure and undercarriage. Main force bearing structures is welded flat-plate box type structure made of high-strength steel plate, boom, hoist mechanism, luffing mechanism and counterweight are all arranged on these structures; Left and right struts have the features of reasonable structure, good overall rigidity and high strength, they can be disassembled for transport.

www.wme.cn

产品的部件和系统描述
Main Parts and System Description

www.wme.cn

吊钩

吊钩名称	起重吊钩
重量（t）	0.46
滑轮数	4
最大绕绳倍率	8

Hook block

Name	Lifting hook block
Weight(t)	0.46
Sheave quantity	4
Max. parts of line for rope reeving	8

钢丝绳

钢丝绳名称	起升钢丝绳	变幅钢丝绳
钢丝绳型号	Φ22 -35W×K7-IWR-1870	ϕ22 -8×K31WS+IWRC-1770
钢丝绳长度	105m	75m

Wire rope

Name	Hoist wire rope	Luffing wire rope
Model	Φ22 -35W×K7-IWR-1870	ϕ22 -8×K31WS+IWRC-1770
Length	105m	75m

安全装置
Safety Protection Devices

紧急停止
按下急停开关，发动机熄火，起升，变幅无动作。

主臂过仰检测开关
检测主臂是否过仰，当检测到主臂起臂超过最大允许工作角度时，发出声音报警，显示屏呈现红色指示，并使变幅机构卸荷，中止起臂。

声光报警器
在发动机工作时，灯在闪烁；在行走或回转时，发出声音报警。

照明灯
配置司机室前方近光灯、可调远光灯、司机室内照明灯灯夜间照明设备，司机室顶棚上安装前后照明灯可以提高晚上施工的能见度及安全性。

Emergency stop button
After this switch is pressed down, engine flames out, no hoist and luffing movements are operated.

Boom over-hoisted detection switch
This switch is used to detect whether boom is over hoisted. When the detected boom angle is bigger than the max. permissible value, sound alarming will be given and red indication will be shown on the display, at this time, luffing mechanism unloading is required and boom raising is stopped.

Audio/video warning lamp
The lamp blinks while engine is working; In travel or luffing movement, it rings with audible alarm.

Illuminator lamp
Low beam light in front of driver's cab, adjustable high beam light, illuminating llight in the cab and night illuninating light are equipped, front and rear illuminating lights are installed on cab roof to improve visibility and safety during working at night.

XGP90吊管机外形图 XGP90 Crawler Pipelayer Outline Dimensions

整机基本状态外形图
Crane Outline Dimensions

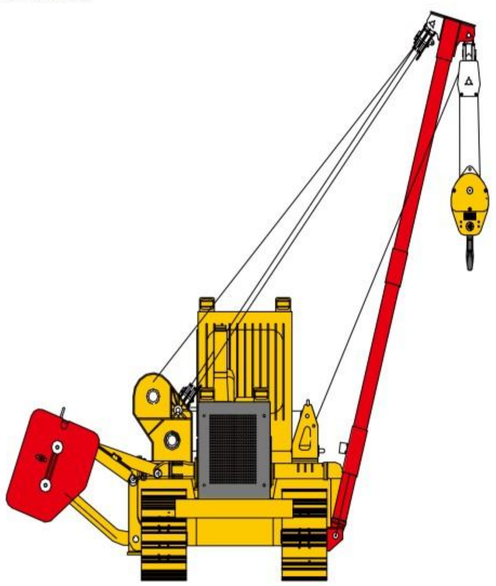

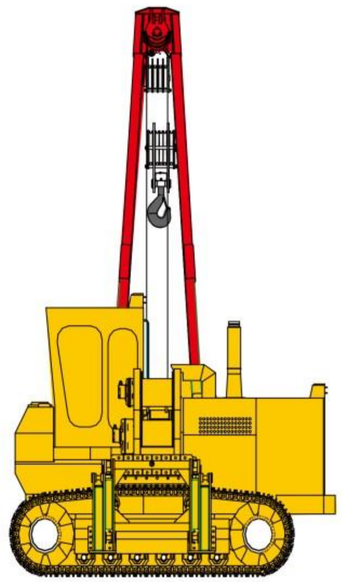

XGP90吊管机主要性能参数
XGP90 Crawler Pipelayer Main Technical Parameters

名称		Item		单位 Unit	参数 Data
最大起重量		Max. lifting capacity		t	90
额定起重量		Rated lifting capacity		t	76.5
整机重量（约）		Total mass（approx.）		t	58.5
主机运输外形尺寸(长×宽×高)		Dimension of basic machine in transport state (L×W×H)		mm	5887×3835×3708
主机运输质量		Mass of basic machine in transport state		t	39.5
平均接地比压		Average ground pressure		MPa	0.09
最小离地间隙		Min. ground clearance		mm	500
最大爬坡能力		Max. grade-ability		°	20
发动机	型号	Engine	Model		Cummins QSNT-C345
	额定功率		Rated power	kW	257
	额定转速		Rated speed	rpm	2000
行走系统	操作方式	Travel system	Operation method		Control lever 操纵杆
	前进（2档）		Forward（2gear）	km/h	3.8/6.8
	后退（2档）		Backward（2 gear）	km/h	4.9/8.2
	履带接地长度		Crawler track ground length	mm	3620
	履带中心距		Crawler track center distance	mm	2490
	履带宽度		Crawler track width	mm	860
	支重轮数量		Lower roller quantity		9×2
起重系统	变幅形式	Lifting system	Luffing form		Wire rope luffing 钢丝绳变幅
	操作方式		Operation method		Hydraulic control lever 液控手柄
	臂架长度		Boom length	mm	9500
	臂架变幅角度		Boom luffing angle	°	0～87
	吊钩速度（8倍率）		Hook block speed(8 parts of line)	m/min	0～6

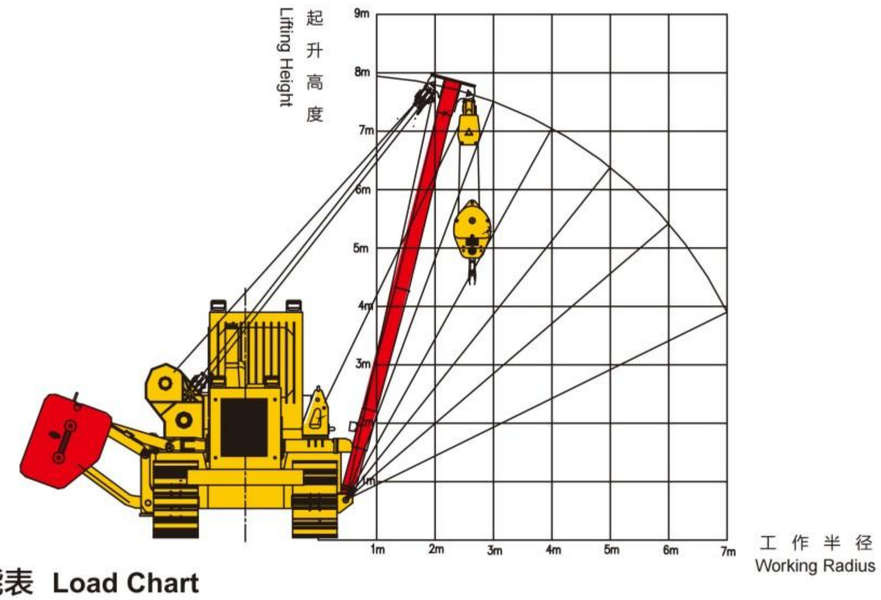

起重性能表 Load Chart

主臂起重性能表单位：t Boom lifting capacity unit: t

工作幅度（m） Working radius（m）	额定起重量(t) Rated lifting load(t)	最大起重量(t) Max. lifting load(t)	起升高度(m) Lifting height(m)
1.2	76.5	90.0	9.4
1.5	63.7	75	9.3
2	47.7	56.2	9.2
2.5	37.5	44.1	9.1
3	30.6	36.0	9
3.5	25.6	30.2	8.9
4	22.5	26.5	8.7
4.5	20.5	24.0	8.5
5	17.8	21.0	8.2
5.5	15.5	18.5	7.9
6	14.0	17.0	7.6
6.5	12.5	15.5	7.2
7	12.0	14.0	6.8
7.5	10.5	13.0	6.2
8	10.0	12.0	5.6
8.5	9.0	11.5	4.9

注：

1.表中起重量所表示的数值，指在坚实、平坦，坡度不大于1%的地面上本机所能保证的起重量

2.表中所列起重量包括定滑轮组重量420kg、吊钩重量460kg和吊索具的重量

3.表中工作幅度是指吊钩中心到主臂侧履带链轨外侧端面的水平距离

4.表中起升高度是指主臂定滑轮中心到地面距离

5. 表中最大起重量为倾覆载荷，倾覆载荷的85%为额定起重量，倾覆载荷的70%为行走载荷，行走载荷不大于15t。

Note:

1.The value shown in the load chart refers to the lifting capacity when the pipelayer is set on firm and flat ground with gradient ≤ 1°.

2. The lifting capacity listed in the load chart includes the weight of fixed pulley block(420kg), hook block (460kg) , slings and riggings.

3. The working radius in load chart refers to the horizontal distance between hook block center and the outer surface of crawler track chain at boom lateral side.

4. The lifting height in this load chart refers to the distance between boom fixed pulley center and the ground.

5. The max. lifing load in this chart refers to the tipping load, 85% of tipping load is the rated lifing load, and 70% of tipping load is the travel load, the travel load is no more than 15t.

www.wme.cn

www.wme.cn

Pipelayer XCMG XGP90 www.wme.cn/pipelayer/